Class 150 Standard Connection Specifications

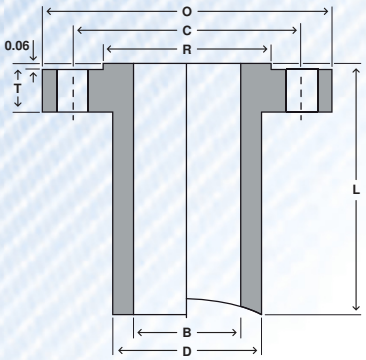

LONG WELD NECK "LWN"

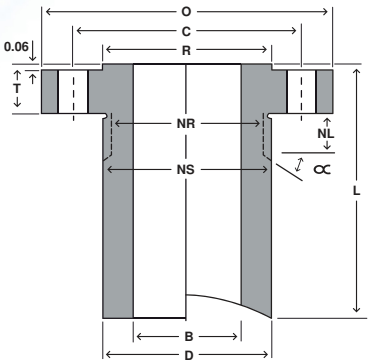

HEAVY BARREL "HB"

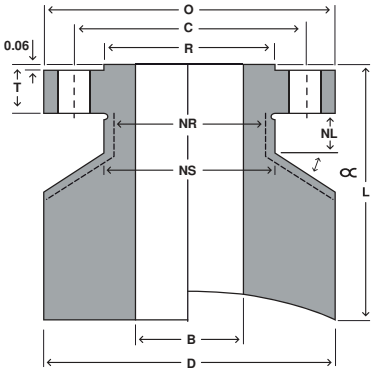

EQUAL BARREL "E"

Size			Flange			Barrel OD			Bolting			Nut			Stud Bolt			Weights						Length
Nom	Bore LWN & E	Bore HB	OD	Thk.	RF of OD	LWN	HB	E	# of Holes	Hole Size	Bolt Circle	Stop Dia	Relief Dia	Relief Length	Size	RF Length	RTJ Length	LWN		HB		E		Base
	B	B	O	T	R	D	D	D			C	NS	NR	NL				Base	Per 1"	Base	Per 1"	Base	Per 1"	L
1/2	0.50	0.55	3.50	0.44	1.38	1.25	1.50	3.50	4	0.62	2.38	1.50	1.25	0.75	1/2	2 1/4	2 3/4	3	0.3	5	0.4	21	2.7	9
3/4	0.75	0.74	3.88	0.50	1.69	1.62	1.88	3.88	4	0.62	2.75	1.88	1.62	0.75	1/2	2 1/2	3	5	0.5	7	0.7	27	3.2	9
1	1.00	0.96	4.25	0.56	2.00	2.00	2.25	4.25	4	0.62	3.12	2.25	2.00	0.75	1/2	2 1/2	3	7	0.7	10	0.9	30	3.8	9
1 1/4	1.25	1.28	4.62	0.62	2.50	2.38	2.62	4.62	4	0.62	3.50	2.62	2.38	0.75	1/2	2 3/4	3 1/4	10	0.9	12	1.2	36	4.4	9
1 1/2	1.50	1.50	5.00	0.69	2.88	2.62	3.00	5.00	4	0.62	3.88	3.00	2.62	0.75	1/2	2 3/4	3 1/4	12	1	16	1.5	41	5.1	9
2	2.00	1.94	6.00	0.75	3.62	3.06	3.69	6.00	4	0.75	4.75	3.69	3.06	0.88	5/8	3 1/4	3 3/4	15	1.2	23	2.2	57	7.1	9
2 1/2	2.50	2.32	7.00	0.88	4.12	3.75	4.44	7.00	4	0.75	5.50	4.44	3.75	0.88	5/8	3 1/2	4	22	1.7	34	3.2	79	10	9
3	3.00	2.90	7.50	0.94	5.00	4.25	4.94	7.50	4	0.75	6.00	4.94	4.25	0.88	5/8	3 1/2	4 1/4	25	2	38	3.6	86	11	9
3 1/2	3.50	3.36	8.50	0.94	5.50	4.88	5.94	8.50	8	0.75	7.00	5.94	4.88	0.88	5/8	3 1/2	4 1/4	32	2.6	55	5.3	110	13	9
4	4.00	3.83	9.00	0.94	6.19	5.50	6.44	9.00	8	0.75	7.50	6.44	5.50	0.88	5/8	3 1/2	4 1/4	47	3.2	78	6	164	14	12
5	5.00	4.81	10.00	0.94	7.31	6.50	7.25	10.00	8	0.88	8.50	7.25	6.50	1.00	3/4	3 3/4	4 1/2	57	3.8	87	6.5	189	17	12
6	6.00	5.76	11.00	1.00	8.50	7.75	8.25	11.00	8	0.88	9.50	8.25	7.75	1.00	3/4	4	4 1/2	75	5.4	103	7.8	216	19	12
8	8.00	7.62	13.50	1.12	10.62	9.75	10.50	13.50	8	0.88	11.75	10.50	9.75	1.00	3/4	4 1/4	4 3/4	102	6.9	157	11	292	26	12
10	10.00	9.56	16.00	1.19	12.75	12.00	12.81	16.00	12	1.00	14.25	12.81	12.00	1.12	7/8	4 3/4	5 1/4	143	9.8	214	16	382	35	12
12	12.00	11.38	19.00	1.25	15.00	14.38	15.56	19.00	12	1.00	17.00	15.56	14.38	1.12	7/8	4 3/4	5 1/2	205	14	329	25	535	48	12
14	14.00	14.00	21.00	1.38	16.25	16.00	17.12	21.00	12	1.12	18.75	17.12	16.00	1.25	1	5 1/4	6	211	13	296	22	585	55	12
16	16.00	16.00	23.50	1.44	18.50	18.00	19.62	23.50	16	1.12	21.25	19.62	18.00	1.25	1	5 1/2	6	246	15	388	29	714	66	12
18	18.00	18.00	25.00	1.56	21.00	20.00	20.94	25.00	16	1.25	22.75	20.94	20.00	1.38	1 1/8	6	6 1/2	270	17	362	25	711	67	12
20	20.00	20.00	27.50	1.69	23.00	22.00	23.19	27.50	20	1.25	25.00	23.19	22.00	1.38	1 1/8	6 1/4	7	311	19	434	31	840	79	12
24	24.00	24.00	32.00	1.88	27.25	26.25	27.50	32.00	20	1.38	29.50	27.50	26.25	1.50	1 1/4	7	7 3/4	423	25	574	40	1046	100	12

For intermediate connections, see subcategory under Flange Dims/Weights at www.texasflange.com.

DIMENSIONS ARE IN INCHES | WEIGHTS ARE IN POUNDS